Wire Recorder Manual

2/6

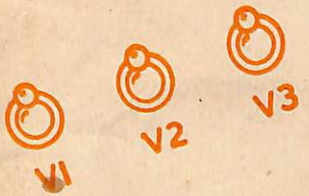

by G. R. JUDGE

BERNARDS RADIO MANUALS ★ No. 88

YOU MUST MAKE A

MAGNETIC RECORDER

All parts for the Home Constructor in stock and supplied by

Park Radio of Manor Park

distributors for

JUDGE INDUSTRIES

783, ROMFORD ROAD, LONDON, E.12.

Telephone: ILFord 2066

TRADE ENQUIRIES INVITED

First published 1949.

Printed for Bernards (Publishers) Ltd., The Grampians, London, W.6, by Southern Press (Bookprinters), Ltd., Mitcham, Surrey.

CONTENTS

PRELIMINARY REMARKS 7

THE PRINCIPLE 10

AMPLIFIER AND HEAD 16

ERASING 18

OSCILLATOR COILS 24

SOME SIMPLE EXPERIMENTS 25

OTHER TYPES OF HEAD 38

A RECORDING AMPLIFIER 40

COMPONENT LIST FOR FIG. 13 44

BIBLIOGRAPHY 45

LIST OF DIAGRAMS

Complete recorder developed by the Author *Frontispiece*

Fig. 1. Erase/Record action ... ... *facing page* 8

„ 2. A simple recorder ... ... *page* 15

„ 3. Hysteresis curve ... ... „ 20

„ 4. Hysteresis curves ever decreasing under an AC field passing the mediums ... „ 22

„ 5a-b. Oscillatory circuits ... ... „ 27

„ 6. Experimental Poulsen head ... ... „ 27

„ 7. Prof. Poulsen's demonstration piece *facing page* 28

„ 8. Recording head from a telephone earpiece *page* 30

„ 9. Recorder from a converted gramophone ... „ 32

„ 10. A more ambitious recorder ... ... „ 33

„ 11. Alternative forms of construction ... *facing page* 37

„ 12. Suggested recording heads ... ... *page* 38

„ 13. The Author's recording amplifier ... „ 43

If you had, or somebody very generously gave you, the parts to make a record player, you would get on with the job without doubting for one moment that you would be successful. "There is nothing to it," you would say—"a motor and pick-up, some records and an amplifier—one simply can't go wrong." Yet wire or tape magnetic recording (until it is pointed out that there is very little difference between this and record playing) seems to have got the amateur a little scared, with the result that a fascinating hobby is being missed.

Newcomers to the subject are apt to think that magnetic recording is a new invention. They do not know that they have been unconsciously listening for years to this method of repeating programmes. In fact broadcasting would be very much handicapped without tape or wire recording machines. Thanks, therefore are due to Professor Vladimir Poulsen, the famous Danish scientist, who found, when experimenting with the findings of his forerunners, Sir Humphrey Davy (1778-1829), and Michael Faraday (1791-1867), that he could magnetically record a sound on a moving iron wire and moreover reproduce that sound at leisure, without any form of "processing," as many times as he desired; and furthermore could magnetically record a spiral sound track upon a steel disc and play back the recording at will. All this happened in the nineteenth century and, for the time, was truly remarkable, as the professor had neither valves for amplification nor any of the helpful apparatus available to-day. For his disc and wire recorders he took out patents (and these can be referred to in the London Patent Office, Chancery Lane, Holborn, London), but there the matter rested for many years. Perhaps Edison coming along about the same time with his cylindrical phonograph, helped to push Poulsen's wonderful discovery into the back-ground, there to be kept for many years by the improved gramophone with discs instead of wax cylinders.

Fortunately there usually turns up someone who refuses to accept what others believe to be a lost cause, such a man was Herr Stille. After the first world war he worked hard and made great strides, and there stand to his credit many patents for improvement in magnetic recording. If the reader is sufficiently interested, these patents, together with Poulsen's, can be looked up in the London Patent Office, or even in local main libraries, which usually keep patent records. Librarians, it will be found, are only too delighted to have somebody to talk to, as most people don't seem to know that they exist.

Another German, a showman named Blattner, saw money in Stille's recording machine and brought one to Britain. Here he toured the music halls inviting members of the audience to step up and "have a go" and the public to listen to the playback of the recording, and by their applause to accaim a new "discovery." Because Blattner popularised the recorder under his own name, the British public accepted the machine as the Blattnerphone. The B.B.C. took a liking to the machines and got The Marconi Company to make some for them: these machines were called Marconi-Stille Recorders, so Stille got some credit for his work after all. The B.B.C. were able to make many improvements and increased the frequency range to 8,000 cycles with practically no background noise. One improvement was to stagger the iron core pole pieces of the recording inductances so that the magnetic recording flux was not directly through the tape but obliquely. See Fig. 1.

These improved machines used tungsten steel tape, as did also the preferred wire recorders of U.S.A. During the last war tungsten was put on priority for munitions, so the Americans turned to carbon steel. Fortunately the wire recorders used during the late war, were not needed for recording music, because carbon steel and tungsten steel have frequency limitations. Voice frequencies however were within these limits, so all was well. Nevertheless broadcasting, under the terrific impetus of war, demanded better and better recorders. The B.B.C. turned to disc recording but the Germans stuck to magnetic recording, gave up metal tape (this might have been through restriction due to the blockade), and tried film and paper tapes coated with iron oxides, and the Americans persevered with wire recording. Each school insisting that their method was the best.

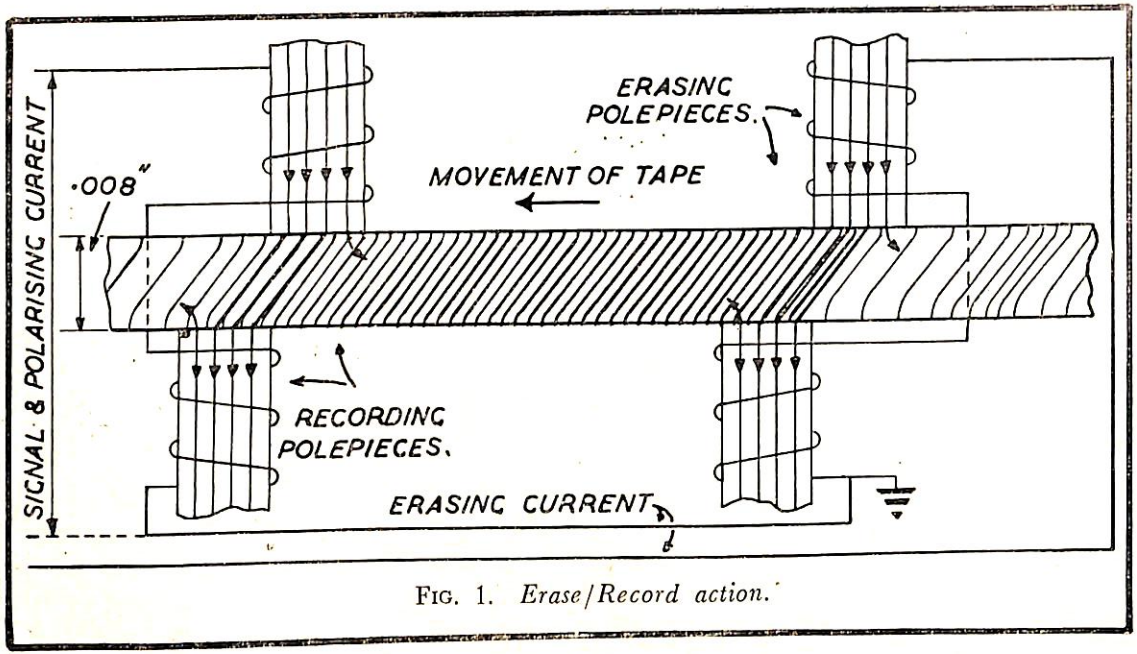

FIG. 1. *Erase/Record action.*

It is interesting to note that the E.M.I.—the Marconi, H.M.V. and Columbia combine, are producing tape recorders in this country, so too is the G.E.C. and a recent announcement says that the American "Sound Mirror" is about to be made here, under licence, also. All the machines are priced far beyond the pocket of the average amateur, and it is the purpose of these instructions to enable any amateur worth his salt to make a tape/wire recorder for as little as ingenuity will warrant.

It is surprising how expensive selling costs can be; manufacturers of deaf aids would have us believe that it costs £4 in advertising for every client crossing their doorstep; similarly, selling costs of recording machines no doubt are also very high, and it is interesting to notice how the wonderful little phonograph which took the first ten years of this century by storm and sold like hot cakes for around the £5 mark, rose to over the £100 mark after the public discarded it and was sold by speciality salesmen to offices for dictating machines. Yet similar machines are lying around junk shops, unable to find a bidder.

THE PRINCIPLE

So much for the history of Magnetic Recording. Now let us examine the principle. Magnetic recording is possible because of a simple fact called Hysteresis. One might liken this to human beings and environment. Just as a man, or woman, will assume some character associated with an environment in which they have lived for a period, so too will some metals assume magnetic properties when permeated by a magnetic field. In most other fields of electrical engineering Hysteresis is a bugbear; but just as bears have their uses, man has made good use of it, and gone out of his way to develop special metals having high Hysteresis character, especially for magnetic recording.

These metals are fabricated into wire, metal tape, sheet or powderd up to coat plastic or paper tapes, or to coat paper or plastic discs. Elsewhere in a magnetic recording

" set-up," care should be taken to see that metals used, should be as free from Hysteresis properties as possible, particularly so for recording-playback " heads." To illustrate this point let us take the common earphone. Inside will be found a small permanent magnet, but great care is taken to see that the pole pieces, with which the magnet is associated, are made of metal of low Hysteresis value, and, more so is this the case for the diaphragm. Were it not so then the pole piece and the diaphragm would become gorged with magnetism, and fail to manifest any magnetic variations caused by changing currents in the bobbins. Think what an unwieldy contraption the domestic telephone would have been if " Stalloy " had not been discovered, one might have had to carry a pocket full of used razor blades and change them for every syllable spoken, or bow the ear piece like a violin with a pulled out architect's steel measuring tape. One possible advantage with the used razor blades would be (that is, if they could be identified, and know what particular syllable they recorded) that they might be stored as a printer does his type, selected as desired, stuck along a paper tape passed through a machine, and the original reproduced any number of times. Fortunately life is made much more simple, and in practice, the recording head magnetises the medium longitudinally, in the direction of travle, with a series of magnetic patterns varying in length, intensity and polarity.

The media upon which magnetic recordings are made can be iron, steel or special steel alloys, like " Crown " recording wire, or iron or tungsten steel tapes, or paper or plastic tapes coated with iron oxides or mixed oxides. Common black oxide, chemically known as FE_3O_4, being three parts iron and four parts oxygen, can be used, but it is a little too magnetic and causes distortion. As an experiment, the writer got a length of gummed tape, and, bit by bit made the gum tacky by holding the tape in the steam from a kettle. Into the softened gum was worked, with the finger tip, some black iron oxide, a messy job by the way, and when the length of tape in hand had hardened up, the surplus oxide was brushed off. Where results were obtained the recordings though weak in strength, were quite intelligible.

When the Allies overran German territory, they seized

all manufacturing processes and published them to the world. One such process was the special treatment the Germans gave FE_3O_4, reducing it to FE_2O_3 gamma-iron oxide. Normally FE_2O_3 is not magnetic, but becomes so through the special treatment. This process changed the black oxide to brown and reduced its magnetic properties. The finished oxide looks very much like jeweller's rouge which is non-magnetic and is useless for magnetic recording. Unfortunately, at the time of writing, recording tape cannot be readily purchased in Britain, it appears to be tightly controlled by vested interests, who are sitting on a good thing. The Germans, during their interrogation by industrial specialists acting on behalf of the Allies, stated that they can make the tape for about 5s. per thousand metres, nearly 1,100 yards.

One will remember that magnets are usually longer than they are wide, and it has been found in practice that magnets "keep" better this way. If, on the other hand, they are magnetised through their width rather than their length, then the magnetism is soon lost. This is confirmed in magnetic recording if the magnetisable medium is run past the head, at, say 2 feet per second, and a recording made of a 50 cycle note, then there will be 50 cycles recorded along the 24 inch length, or the magnetic length of one cycle of the fifty will be ·48 inch. To decrease the speed of the medium to a traverse of 12 inches per second would halve the magnetic length of one cycle. Fortunately one can record at much lower speeds before the suggested losses occur, but it is always desirable to run the medium at a sufficient speed, so that the recorded wavelength is not much smaller than the gap in the recording head, which has been found by experience to be most efficient at about one thousandth of an inch (as a guide, the thickness of a cigarette paper). Happily this is at least ten times larger than the average magnetic particle size.

Tape or wire recording, as does also sound on film, offers one great advantage over "lateral cut" gramophone records. At low frequencies, that is below 250, a cutting stylus has an increasing amplitude as the frequencies get fewer, and to avoid the cutting stylus breaking through the wall to the adjacent groove, special correcting circuits, offering Constant Amplitude Characteristics, are necessary.

To correct this suppression, when records are being reproduced, volume expander circuits are used, if it is desired that the reproduction shall approach as near as possible to the original performance. It will be realised that where circuits are doctored, first one way and then another, quality must suffer. Fortunately magnetic recording will take all one likes to give it, and extremely good quality is possible. The *average speed* of the groove to the needle of a 78 revolutions per minute gramophone, is 29 inches per second; film sound track, compromising with the picture speed, is 18 inches per second, while better quality is attained by running wire at 24 inches per second. For economy, the wire can be run much slower, and the voices of one's friends are readily recognised at speeds as low as 6-8 inches. As against gramophone records, there is no surface, if the head is periodically cleaned, and dust and lint removed, and with no amount of jarring or shaking of the recording gear, either during recording or playback, is it possible to disturb, or produce any sound other than those recorded magnetically. If it is argued that there is noise it must be pointed out that the level is 40db., or more, below the maximum recording level.

Enough time has not yet passed to be able to say how long magnetic recording will remain, but recordings made in 1903, on plain iron wire, are still good. The daily press mentions that traffic lights are to be supported with spoken directions, which will be done by magnetic recording, and here it will be realised that the playback will likely be every few minutes and going on day after day. Repetition does not seem to subtract from the magnetic potential on the medium, and even if it did, with the passing of time, all that need happen would be for the local policeman to turn up the volume control just a shade. One test made showed that the volume did fall off, after 17,000 playings and then remained constant for another 180,000 playings; the drop in volume being about 4db., to the original level.

The reader will probably have seen, if only on the films, an inter-office communication amplifier, where the boss flips a switch, and can talk to some distant assistant, who, in turn, can talk back. This is accomplished by switching the loud speaker in the amplifier from loud speaker position in the circuit, to microphone position in the circuit. At one moment it is a moving coil loud speaker, and the next a

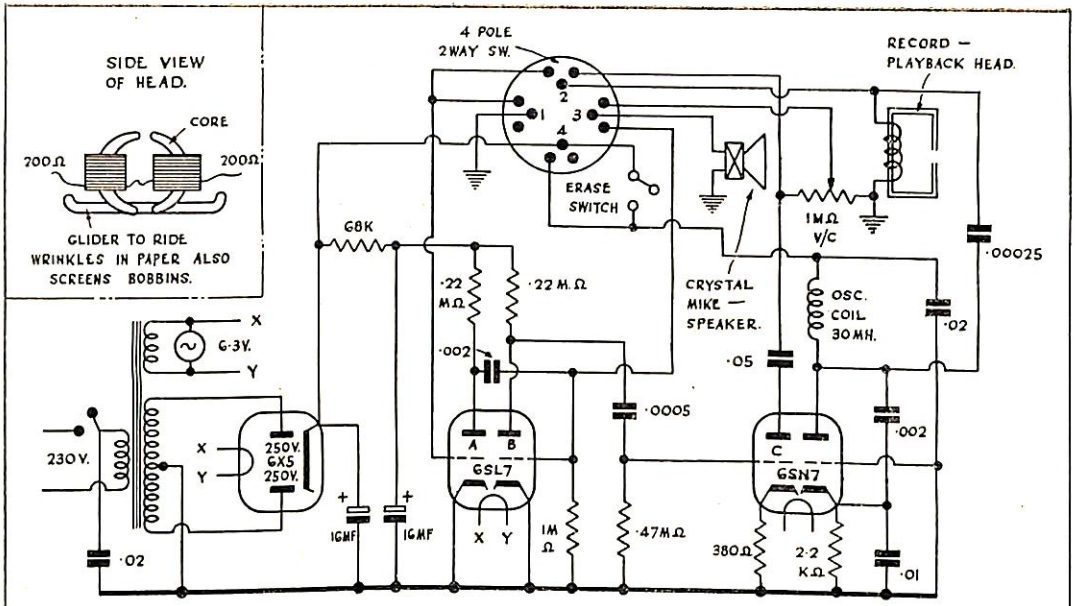

FIG. 2. *A simple recorder. To record, stages B and C are used; for play-back A, B and C are used. The erase switch is a press-holdon type.*

moving coil microphone. A similar practice is observed in magnetic recording; at one moment the head is switched to the output position, normally occupied by the loud speaker, and the next moment switched to the input position normally occupied by the microphone. Examination of Fig. 2 will show how a head is switched from record to playback. This particular circuit is for the "Mail A Voice" an American Recorder, also made under licence in this country and sold as the "Recordon."

The recording medium used is a disc of paper or plastic, and the pick-up arm has, instead of the customary pick-up, a record-playback head. The actual size of the head is about the size of one's little finger nail. There are two small bobbins wound upon two "new moon" shaped pieces of metal and assembled so that the moons face each other and their top and bottom tips meet; the bottom tips making the gap and the two top not bothered about. The total D.C. resistance of the two bobbins is 400 ohms. No step-down transformer is used to couple the bobbins to the anode of the output valve. Coupling is through a ·05 condenser, and the other side of the bobbin is connected direct to "chassis earth."

Tracking is provided to guide the arm across the disc. After a recording is made, the paper disc can be folded up and posted like an ordinary sheet of writing paper. Instructions supplied with the machine advise that the paper be folded first to the posting creases, then smoothed out before making a recording and then folding back into the creases first made. A unique feature of this machine is that a duplicate copy can be made with the one recording, just by putting two paper discs one on top of the other on the turntable and then the recording made. The magnetic flux goes through the top paper, and also records on to the lower disc, thus an exact copy can be kept for reference. Another outstanding feature is that a recording can be scrambled, so that the recording cannot be eavesdropped. The tracking device is like a small record (pre-war 6d. at some stores) placed over the paper disc leaving about three inches of the paper showing all round the centre disc; halfway up the pick-up arm is a needle, which runs in the tracking groove, leaving the magnetic head overhanging the three inch area.

Now it will be appreciated that if the track on the tracking disc is concentrically spiral, and a recording made, then another machine with a similar tracking disc should reproduce the original recording, which it does; but it is possible to buy pairs of tracking discs, and the manufacturers guarantee that they are the only two of their kind in the world. These pairs of discs have wibbly wobbly tracks, not quite as irregular as one's fingerprints, but since they are both equal, then a recording made in Liverpool can be exactly reproduced in Buenos Aires, provided the agent there has the replica disc. To use any other disc makes the reproduction just so much gibberish. This is a great improvement upon Professor Poulsen's original recorder patented in 1898.

AMPLIFIER AND HEAD

Referring to Fig. 2, it will be observed that the microphone for recording purposes is switched to the right hand side of the 6SL7 valve; actually this is the second stage in this particular valve line-up. Amplification in this instance is handled by this stage, and the left hand side of the 6SN7 making only two stages of amplification; but for playback the recording-playback coil is switched to the grid of the first half of the 6SL7, in this case making three stages of amplification.

Regarding the circuit, one could almost say it is stupidly simple, but nevertheless it does its job.

During the past years the writer has received numerous letters from constructors who ask how many turns and what gauge wire should be used in winding heads. One is almost tempted to say that it does not matter in the least but that of course is not strictly true. No doubt, to say it doesn't matter much, is because the experienced constructor knows what liberties can be taken, and very often adapts to his use the wire at hand. The controlling factor of course

is how much flux will the core of the head take, without being saturated, and this is controlled by the amount of current in the circuit. For example a head's core might comfortably take one ampere turn, and this can be applied with a winding of just one turn through which is flowing one ampere, or 10 turns, carrying one tenth amperes, or 100 turns, carrying one hundredth amperes. All this can be readily ascertained in the research department of a manufacturer, but the amateur, not having research facilities, will have to find out by trial and error. Fortunately results, good or bad, are easily obtainable, and since to make recording heads costs only a matter of pence, one does not stand to lose much during experiments. It should be remembered, however, that manufacturers are encouraged to use high resistance, and those tested by the writer average about 400 ohms D.C. resistance; high resistance is a bad word to use: it should be high impedance. Such heads are connected direct to the output valve anode, via a coupling condenser, thus saving a step-down transformer. A transformer to a manufacturer might mean four or five shillings, whereas a little extra fine wire wound into a head may only mean two or three pence. Shillings saved in manufacturing costs may make several pounds' difference in the market price of the article. Another helpful fact is that a transformer is a much larger thing than a recording head, and has in its construction a goodly amount of iron, which is influenced by the magnetic fields of transformers; this can cause an annoying hum, and may need a lot of heavy screening to overcome; so be sure to keep microphone transformers (and this goes for head transformers too) well away from possible contamination. For the amateur, however, low resistance heads are far more easily and quickly made, and it is fairly safe to assume that an amateur has by him a step-down transformer.

Therefore, it seems, we should have a small-powered amplifier, a motor of some sort to move the magnetisable medium, the medium itself and a recording-playback head, which can be, by suitable matching transformers, matched to the input impedance of an amplifier, and also the output impedance. In contrast a record player has very limited application, added to which is the heavy cost of records; whereas a magnetic recorder will record any speech, radio item, telephone conversation, church or wedding service, play

rehearsal for check over, or criticism, etc., and the recording can be kept or erased.

ERASING

It was mentioned earlier that the recording medium assumes along its length multitudes of varying magnetic potentials, a thousand times more complicated than the graph on a sick patient's chart. Before the advent of supersonic erasure, erasing was done by "wiping" the recording medium with a permanent magnet, and while some measure of erasing was accomplished, much was left to be desired. Following the use of a permanent magnet, a D.C. solenoid was tried for erasing, the only advantage being convenience, then came the principle of supersonic erasing. This probably started through the impatience of somebody who coveted the time taken to run back the wire or tape over the erasing head. It is possible he may have seen a watch repairer demagnetising a watch, by passing the watch through an A.C. magnetic field, and thought to himself, "why not get the whole spool of wire or tape and pass it through an A.C. field and demagnetise the whole spool at one fell swoop?" Having satisfied himself that this did the trick to a nicety and more perfectly than a permanent magnet or D.C. solenoid, the next question arose :—How to erase a phrase or whole paragraph without erasing the rest of the recording? It should be obvious that to do this one would have to pass the wire or tape over a head energised with an A.C. field, and since 50 cycle mains are at hand, what greater temptation could there be? It is regrettable to have to state that to do so, one records upon the medium a beautiful 50 cycle note—more hum than musical. Easy, it might be argued, why not use a frequency beyond audible limits? Yes, but what frequency? Tests showed that a suitable frequency lays between 80K/cs and 30K/cs; this width offers a goodly enough choice, and since you may be more conversant with wavelengths than frequencies, the wave band lies be-

tween 3,750 and 10,000 metres. If too low a wavelength or too high a frequency is chosen, it is possible for the second or third harmonic to interfere and hetrodyne or beat up some note in the audio band. A comparable difficulty arises and has to be avoided in superhetrodyne radio receiver construction, and as in a superhet it is very easy to have a valve or portion thereof to act as a local oscillator, so too, is it possible in the valve line-up of a recorder amplifier. For an example see Fig. 2, and examine the right half of the 6SN7 valve; there is not much to it, is there?; and yet to try and record without it would be like a water colour artist trying to paint without water, and an artist working with "oils" trying to paint with turps, or an army trying to be soldiers without discipline. When the pictures are painted the solvents vanish into thin air, and the discipline of the soldier equally obscure when his job is done. The supersonic frequency which is so necessary at the time of recording cannot be found immediately the recording is made. Not only will the supersonic frequency nullify or erase any recording not wanted, but just a little of the oscillatory current fed into the head, either via a condenser coupling, or a separate winding on the head for itself fed into the head at the time of recording, greatly enhances the quality. This use of the sonic frequency is termed "Bias" and while any frequency will erase, provided speed is not too fast in relation to frequency, it is the Bias need which gives cause to arrange the frequency well above audio limits to avoid interference. Up to date nobody has been able to adequately explain why this adding of Bias should make such a marked difference in the quality of the recordings and the field lies open for some constructor to expound a theory. Erasure can be explained, and to do so one must understand the Hysteresis curves of ferous metals.

It should be understood that makers of the numerous metals needed for electrical magnetic circuits, need to have some record of the metals' properties for comparison and to aid correct choice for repeat orders. One way of doing this is by the Hysteresis curve just mentioned; alternatively, it is often referred to as the B-H curve. Such curves show the most economical lines of induction to apply to the metal, to keep within the limits of magnetic saturation. Let us look at a typical curve and to help impress such a curve on your mind, visualise the side view of a lemon

pip or trace out the curve in Fig. 3. Assume that this curve is that for a piece of metal under test, and its magnetic state can be represented on the graph as at zero point O. To the right, that is the line OH, shall be scaled the amount of ampere turns necessary to create an inductance about the metal. If an inductive field to the strength OP is created along the line OH, then the core will be magnetised to some value scaled along the line, and for the value OP, this point might well be the saturation point of the metal, indicated by the value OC. No matter how much the inductive field might be increased towards H, the magnetic flux cannot be increased because saturation point of the metal limits any further build up. Therefore to try and do so is sheer waste of power and in the case of transformers, cause burn-out. If now the current is switched off in the inductive field, it would be expected that the magnetic flux in the core would collapse, together with the inductive field back to zero O; but, because of a state of affairs called Hysteresis, this does not happen. Instead, during the time taken for the inductive field to collapse from P to O, the flux travels much more slowly, and collapses back to a point A along the line OC. It will be seen by this that the metallic core is retaining some magnetic flux. If the metal under test was intended for magnetic recording, this state of affairs would be very convenient, until such time that we desired to erase the recording off the medium. In earlier days of magnetic recording, erasing was done by wiping the medium with a permanent magnet or D.C. Solenoid, in an effort to bring the flux retained in the medium back to zero point. To do the job properly, one would need a magnet of equal strength to the recording's magnetic strength, and apply this in opposite polarity, so that the recorded magnetism would be cancelled out; but how is one to know the particular strength of the magnetism on the portion of the recording medium under erasure? The result was, that the erasure was never quite enough or too much, that is, the point C on the line OC was reduced to some point along OD, but rarely back to zero O. Therefore the erasure was never perfect. Fortunately, somebody remembered the watch repairer who has a neat way of demagnetising watches affected by contact with dynamos. The watch is slowly entered into and out of an A.C. magnetic field which at the mains cycles of 50 per second means 50 reversals per second

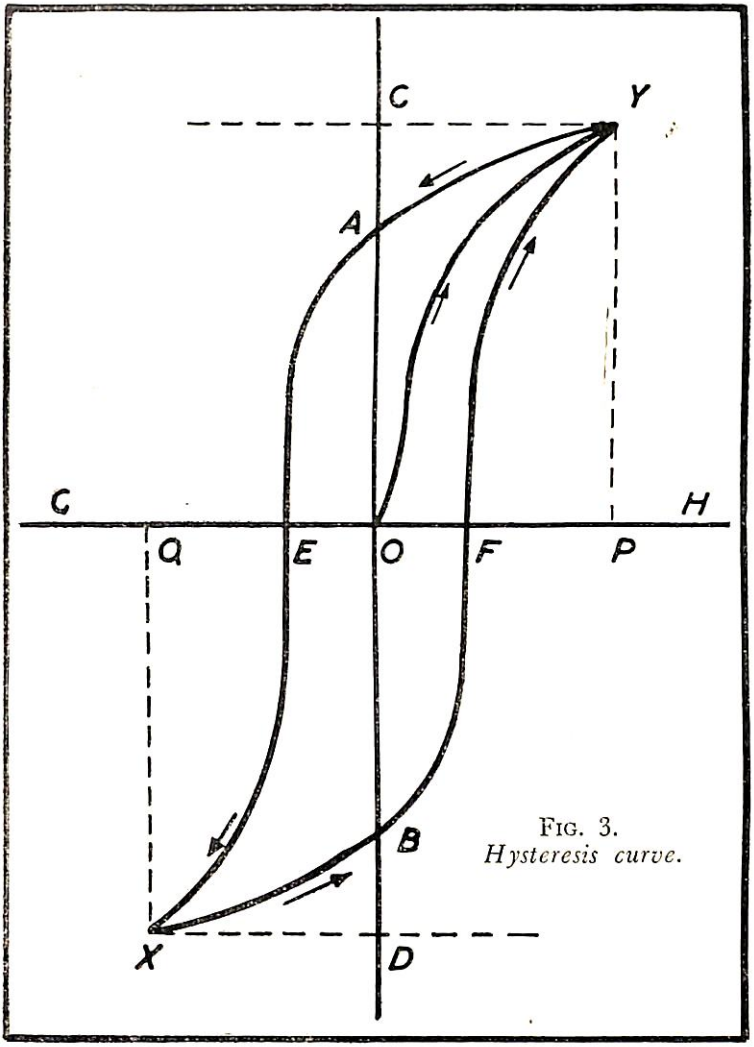

FIG. 3.
Hysteresis curve.

covering all magnetic potentials between zero and saturation point of the watch's structure. This in effect is equivalent to reversing the current in the inductance, to the value OP, in the reverse direction to the value OQ which will magnetise the core to the strength OD making a flux equal to the original flux OC but now in the opposite direction. It will be remembered that if the current OP was switched off, the flux collapsed to point A, so, on the next reversal of current, we have to arrange a lesser inductive field than OP, in order, that, when the current is switched off, the flux in the core will collapse to a lower value than A and nearer zero O. This is repeated enough times until all flux is eliminated. See Fig. 4.

You might ask how this decreasing is done. It is extremely simple. The watch repairer does it by moving the watch away from the magnetic field, and as the inductive field changes with the varying cycles, and the watch slowly recedes, the induced flux is also weakening, and cannot magnetise the core to the immediate former strength. Similarly the medium in the magnetic is moved by the traversing mechanism away from the alternating flux, and likewise gets demagnetised. The watch repairer, with his unhurried movements, and the 50 cycle mains, makes a happy match, but with the recording wire travelling at two feet per second past the erasing head, and trying to erase at 50 cycles, is a totally different matter. Two feet is 24 inches, and while this length is passing the head, only 50 cycles will occur, making only one cycle per every twenty-four 50ths, or one cycle per half inch. This is obviously not enough flux reversals to neutralise the wire. Therefore we have to choose a faster frequency. Research and experience indicate that the most suitable frequency is around 30 K/cs for wire and 80 K/cs for tape.

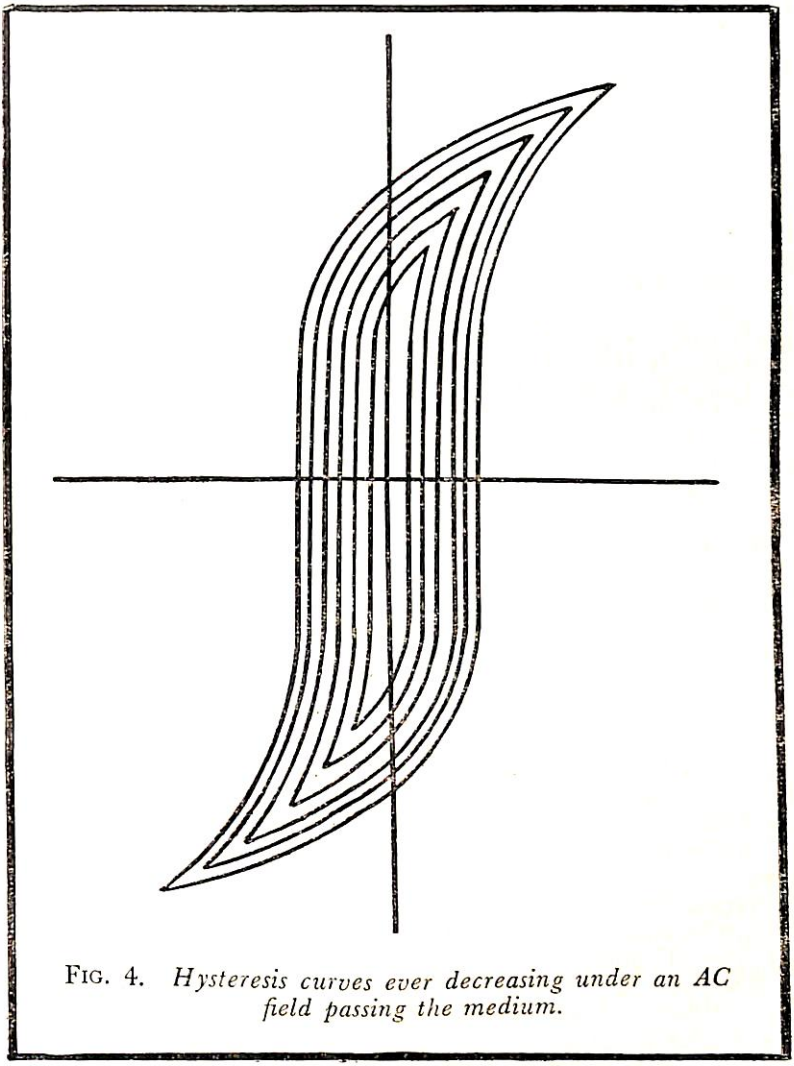

FIG. 4. *Hysteresis curves ever decreasing under an AC field passing the medium.*

OSCILLATOR COILS

A constructor wishing to make his own oscillator coil need not feel handicapped because he does not know at what frequency a selected coil is oscillating. A check can be made on the domestic radio and is accurate enough for the job at hand. Set the oscillator going and listen on the radio set. Swing the pointer across the dial and note points of oscillation, to make sure that the oscillations are generated by the oscillator under test, switch it off and on. Make a note of the readings on a piece of paper; if the readings are in kilocycles, so much the better, as otherwise wavelength readings will have to be converted into K/cs. Selecting one of the oscillation picked up on the radio, one has to decide if it is the fundamental frequency, or a harmonic. Since harmonics are always the multiple of another frequency, one should keep dividing until no further division can be found, because the frequency which will not divide, should be the fundamental. Therefore select one of the oscillations created by the oscillator, divide it by 2 and "fish" for it on the dial of your radio about the spot it should be. Having found it, divide the frequency by 2 again, and seek this new frequency until no further division is possible. Since one is endeavouring to find the fundamental some difficulty may be encountered, because domestic radios do not usually go above 2,000 metres or 150 K/cs, and while the fundamental and second (double) should be strong, the third (three times) and fourth (four times) should get weaker and should indicate that one is getting away from the fundamental. The constructor may find it necessary to get the oscillator a few feet from the radio receiver, and as a further aid to know if it is oscillating, try holding near the coil one of those small neon bulbs used as cooker indicators; or, failing that, get a torch bulb and holder, and to its two terminals loop a thickish piece of wire, say about two inches: if this is held near the oscillating coil, the bulb should glow.

Don't go dabbing your fingers on the coils, in case it is oscillating furiously, and has built up a fairly high voltage which "bites" and burns.

A set of oscillatory circuits in popular use, are shown in Fig. 5 a-b.

(a) is that used by the "Mail A Voice," and it will be noticed that the output from the oscillator is fed via a condenser ·00025 into the head (see Fig. 2). Fig. 5b shows the output being fed via a few turns (which together with the oscillator coil makes a step-down H.F. transformer) into the erase head winding on the head indicated by figures 3 and 4 in the top left hand corner of the diagram Fig. 13.

SOME SIMPLE EXPERIMENTS

It is hoped the foregoing remarks will have whetted your enthusiasm enough to make you decide to make a recorder, and to help you, there follow some suggestions. First of all, you will have to make up your mind about an amplifier. Maybe, you who already have one, would like to use it. If it is one of large output, you will not need anywhere near the full power output possible, and will have to determine how little of it you can use, whether the first two or three or the last two or three stages. Therefore you should make a few tests.

Take a 2½ inch wire nail, cut off the head and allow enough of the point end to be gripped in the chuck of a hand twist drill, divide the remainder into three sections. Around the first and third sections wind on some wire; and don't wind it on as though you were coiling up a length of string around the fingers as this puts a twist into the string or flex or likewise wire. Always rotate the core upon which is to be wound the wire, and no kinking should occur. You are going to ask "how many turns?" You in turn will be asked "how do you intend to couple it to the relevant circuit?" As this is an experiment, naturally you will not wish to go to too much trouble, so this should

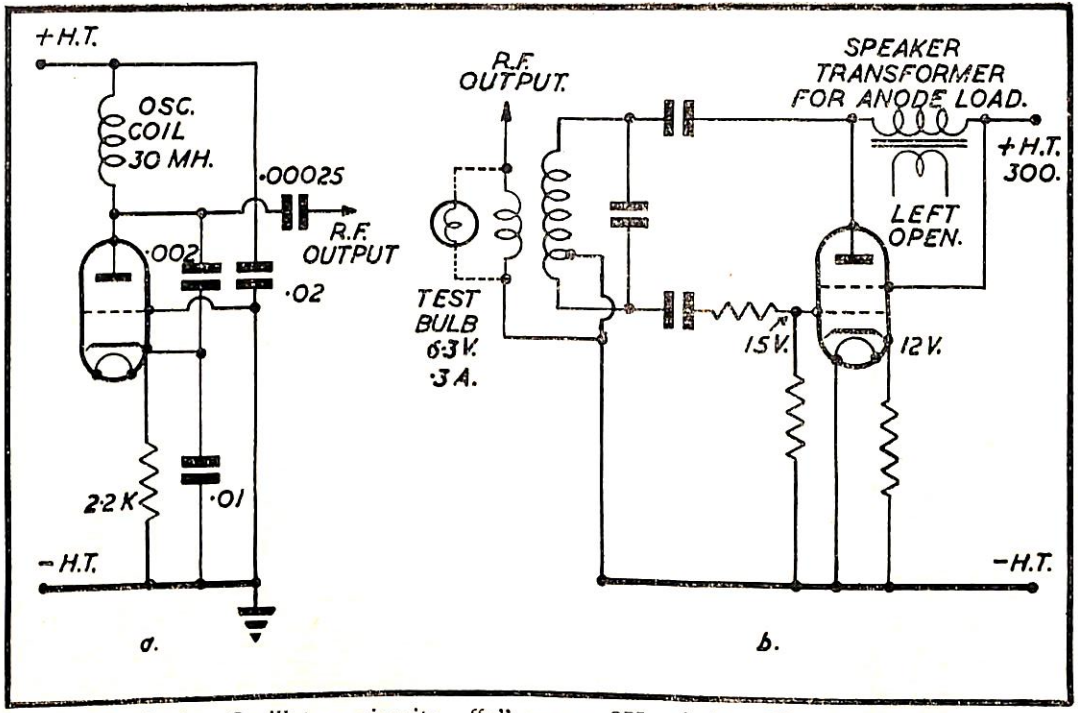

FIG. 5*a-b*. *Oscillatory circuits. "a" uses a* 6J5 *triode. The tetrode at "b" is a* 6V6.

rule out lots of turns, and call for a step down transformer, with a 2, 3 or 4 ohms secondary impedance. To match your "nail recording head" to such a transformer, you will therefore need to try to get an equal impedance in the head. As a very rough guide it is accepted that the DC resistance of such a winding is roughly a little less than the AC impedance. Therefore wind on to the nail two windings of 1½ ohms each. As not much power is called for, thin wire will be suitable and by thin is meant a gauge which can be comfortably handled. Having wound on the wire, treat with hot melted candle wax, which should hold the turns for further manhandling. Now take a strong pair of pliers and hold between the jaws the middle section of the nail and bend the two end sections up to meet each other at the apex of the triangle thus formed, not reckoning of course the end bit which was left on for the drill chuck to grip. A little correcting may be called for with a file and a nice V formed into which the recording wire will slide. (See Fig. 6.)

This type of head was used by Professor Poulsen in 1899 and all he had for recording was an ordinary carbon microphone, a battery and the head just described. He called such a head a writing head when used for recording and a reading head when used for playback. One of his pet

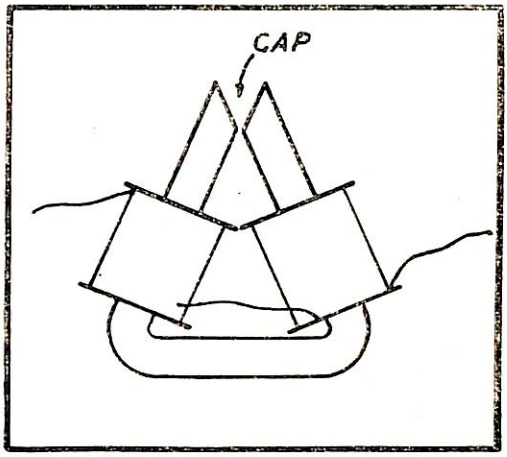

Experimental Poulsen head.
FIG. 6.

demonstration pieces (See Fig. 7), was an instrument which had many wires, after the style of a harp. These strings, instead of being stationary, were lengths of wire on spools at the top and drawn by mechanism on to spools at the bottom. Stationed at intervals along the first wire were reading heads each being connected by flex to a writing head on one of the other wires.

At the head of the first wire was a writing head connected to a microphone. Speaking into the microphone caused fluctuating currents in the writing head to magnetise into the wire a recording of the spoken message. As the first wire travelled on, the recording came under the reading heads in the order of their positions, and these in turn activated the writing heads on the other wires, and so Poulsen was able to make as many copies as he wished. Mass production, if ever there was! The inventor found that heads should be quite rigid, as vibration within the head would cause fluctuations in the recordings; so constructors are advised to "lock solid" heads. An easy way to do this, is put the head into a drawer of an empty match-box and pour in melted wax. When it has set solid, break away the sides of the box and cut away the wax until the V gap is exposed. Another type of head and one which lends itself to both tape and wire can be made from a telephone ear-piece. At the time of writing there seems to be an abundance in the surplus stores. A type particularly adaptable is ex-government 10A/13466. Dismantle and separate out the small magnet, which is very handy as an erasing aid. Next warm the pole pieces with a soldering iron or some device to soften the sealing wax, which locks the bobbin to the pole pieces. Separate the bobbins, as only one is needed, and be careful not to shorten or pull out the connecting wires. Next cut the diaphragm diagonally across to get a strip wide enough to pass through the bobbin the wide way, that is, as if you were pushing a ruler through the outer case of a matchbox. Now cut the strip in half and fashion the two halves as shown in Fig 8.

Note the little "ears"; these, when folded down, should have their edge parallel to the side of the strip, and thus help to make the recording gap uniform. Now fold the strips into J shape taking care to make side B the thickness of the metal longer than side A, then when the two pieces are inserted into each side of the bobbin the edges form the

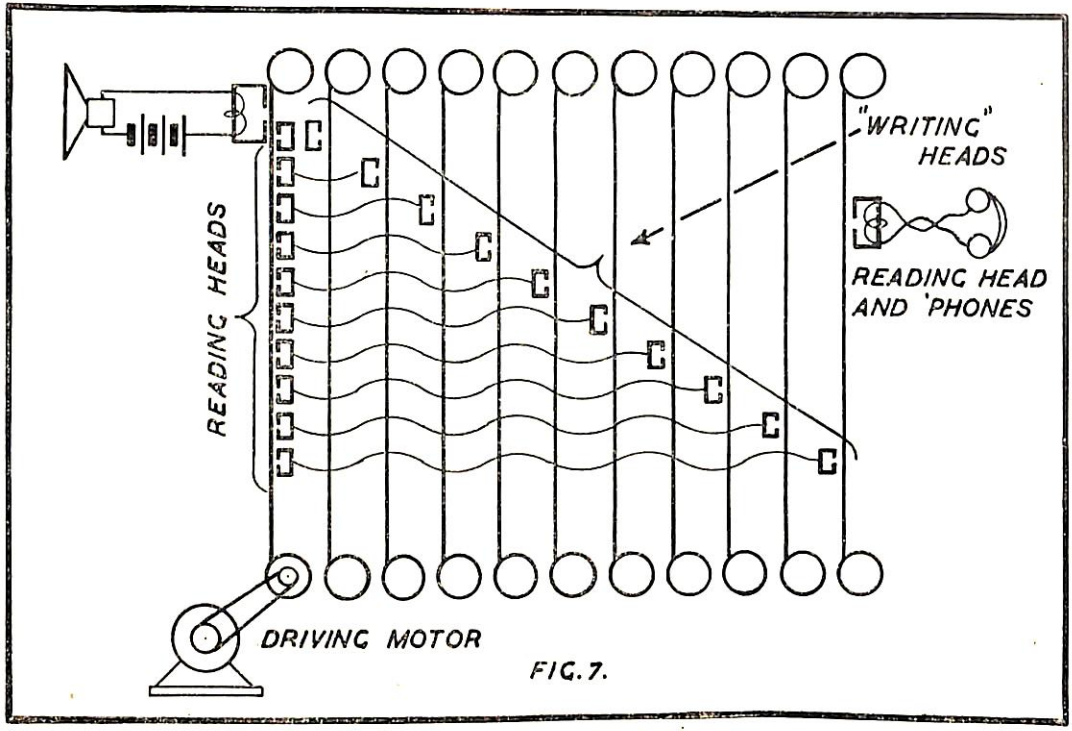

FIG. 7. *Prof. Poulsen's demonstration piece.*

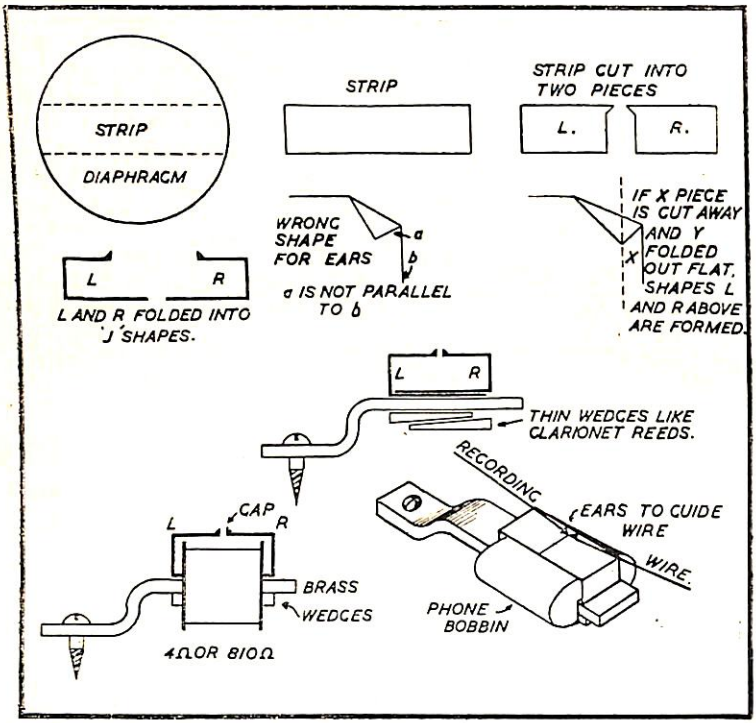

FIG. 8. *Recording head from a telephone earpiece.*

gap which should come exactly level. Before working on the diaphragm practice first on a piece of stiff card, visiting folded down on to a scrap of the diaphragm used as a spacer. This will leave clearance for the wire. Then make sure there are no rough edges to snag the wire. Before wedging up the head see that the gap is the thickness of a cigarette paper apart, and that the "ears" are parallel with the rest of the gap. When the head is assembled dip the whole into a "tear away" receptacle full of melted wax and allow to set solid; then the face over which the wire

or tape will pass can be cut clear of the wax. Having made one or other of the two heads described, connect it, via a step-up transformer, to the input of your amplifier, or, at least, the section you have decided to use. Now get a piece of steel, and preferably, a piece you believe has not been contaminated with a magnet; if you strike it to make it ring, hold it near the gap and you should get reproduced in the loud speaker a very much amplified note. A tuning fork or a banjo string, stretched between two nails in a stick and plucked, will make more musical notes but there are lots of things about you can try. Having satisfied yourself that your head works at least one way, *disconnect,* and connect into the output stage, and with a microphone or pick-up, connected to the input stage, try drawing the bow you made with the banjo D string, across the head at a uniform speed of about two feet per second, remembering that a second is a lot longer than most people think. For instance photographers say Ko—dak one, ko—dak two as a guide for counting seconds. Provided that the experimental head has been constructed with due care and attention, little difficulty should be experienced in obtaining a faithful repeat of the original piece of music or speech when you reverse the order of things and connect the head to the input circuit and the speaker to the output. If you are unlucky, remember that you probably have something wrong because, whereas you have the advantage of valves, Poulsen had to make do with headphones, direct off the reading head.

So far, so good. Now have a look at Fig. 9 and Fig. 10. Which will you make? Regarding the first, you will notice that the wire is pulled by the capstan fixed on to the centre spindle of the gramophone turntable. This is done to ensure a constant speed. To just let one spool pull from the other gives a varying speed as the amount of wire on each spool increases and decreases. To overcome this difficulty the spools are allowed to slip within wells on the pulleys but there is enough friction to keep the wire comfortably taut and avoid kinks or loops. Most gramophones revolve at about 78 turns per minute. Therefore, it is easy to work out the speed of traverse below a gramophone needle or recording head, by calculating the circumference of the capstan, in the case of wire. To ensure a speed of two feet per second, a suitable capstan then, should have a diameter

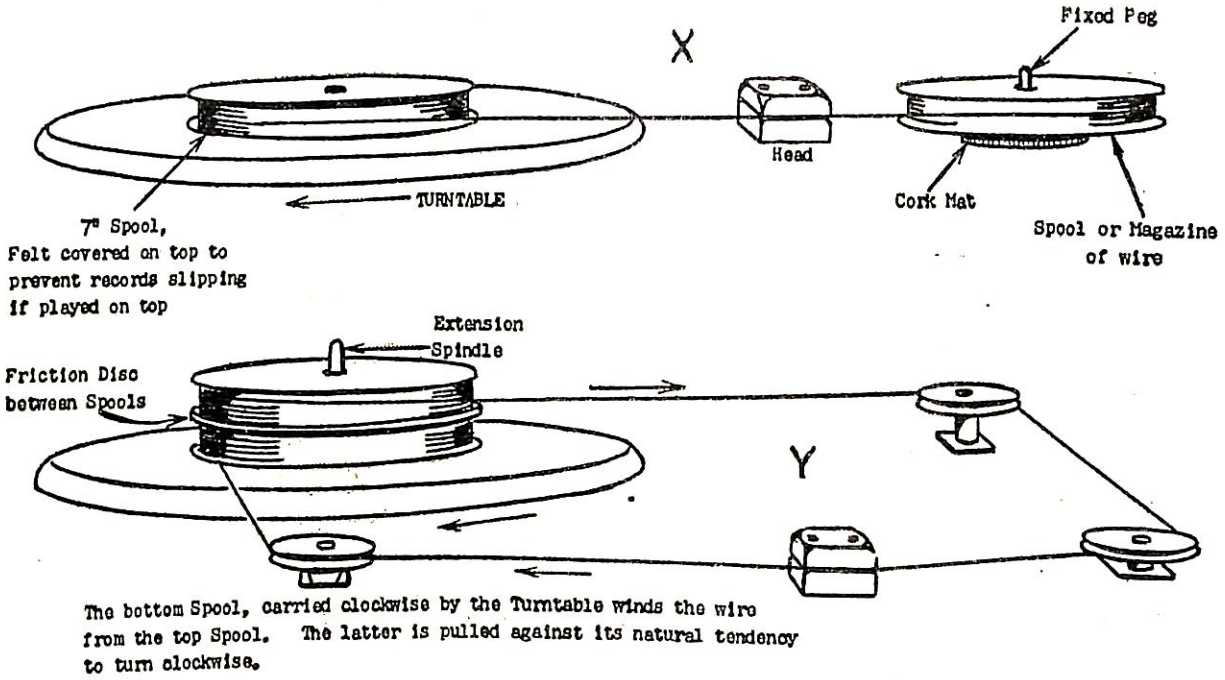

FIG. 9. *Recorder from a converted gramophone.*

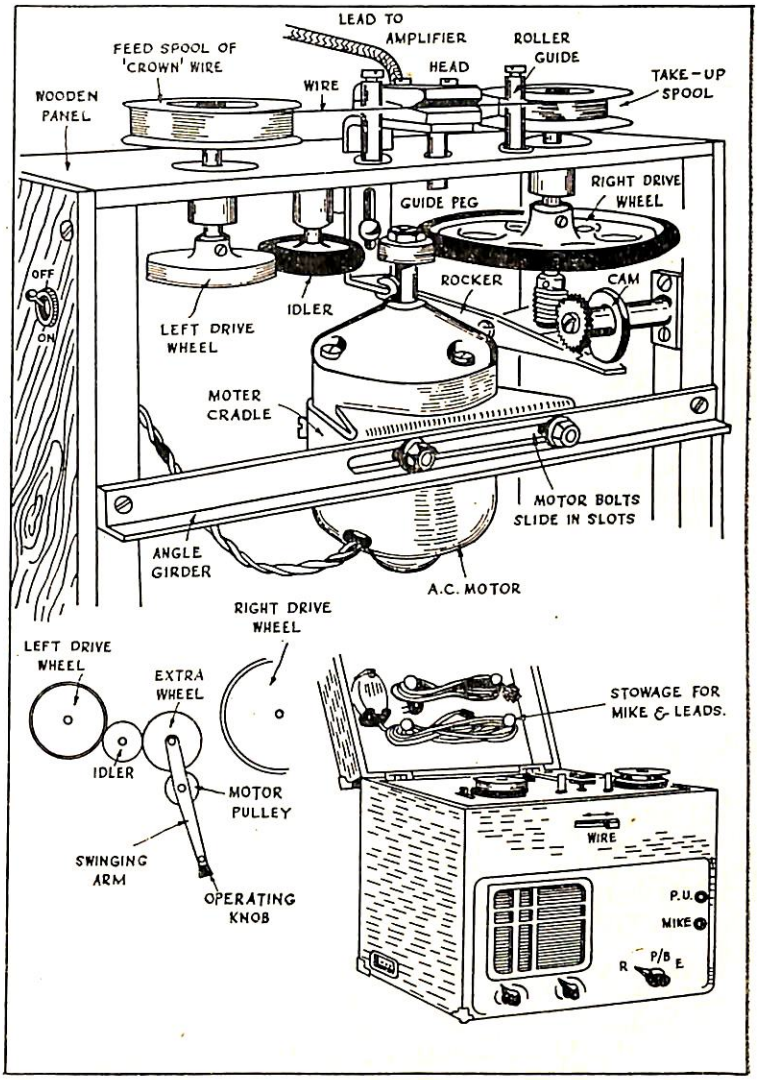

FIG. 10. *A more ambitious recorder.*

of about 7½ inches, and such a capstan, if felted on the top side, would be big enough to carry a record, so that one could play a record via a pick-up, feed the output into the amplifier, and record it upon the wire. If smaller capstans are used then the speed of wire will be slower and, while this doesn't seem to impair the quality of speech recordings, it does curtail the harmonics which go to enrich music in general. To lay the wire evenly on the spools some arrange-sewing machine is required, and it will save trouble if you can obtain from your local machine repairing mechanic such a cam, worm and wheel. Usually they are loth to part with them owing to the great shortage of spare parts for sewing machines. Don't get the big type of heart-shaped cam used on some machines as the width between the cheeks of the spools is quite small.

The wire, in traversing from one spool to the other, is arranged to rotate a small pulley, which in turn rotates the worm, and this turns the worm wheel on the same axis as the heart shaped cam. This cam rides on stud or pin, set in the base board, and raises and lowers the rocker bar carrying the head. This imparts to the bar a see-saw motion and guides the wire to lay evenly upon the spools. If this is not done the wire will pile up in one position on the spool and then tumble over on its side and probably tangle up and end up a total loss.

A little point which troubled the writer for a while until it was tracked down, was a shuff . . . shuff . . . shuff noise as the turntable rotated. Examination proved there was nothing touching, and called for deeper thought. At last the noise was tracked down to a magnetic polarity in and across the metal forming the turntable. This was probably of long standing and might have naturally accrued when the turntable was being stamped out. The molecular structure of the steel aligning itself and assuming a polarity, which, weak as it was, was enough to influence the recording-playback head. A piece of steel plate (tin can doesn't seem to be thick enough and a piece of mumetal was not handy at the time) placed between the edge of the turntable and the head put this matter right. To wind back the wire on to its original spool, one has only to shift the baseboard or plate, so that the right rubber-tyred pulley engages the perimeter of the turntable and the left one runs free. It

is also necessary to remove the loop around the capstan and replace this when again recording or playing back. Good quality recording wire is expensive and there is a likelihood of spoiling it. Until one's mechanism is correct and one is also experienced in handling it, the constructor is advised to practise with a reel of fuse wire, which can be purchased quite cheaply. A quarter pound reel and a gauge a little thicker than "Crown Recording Wire" (·004 or 4 thou. inches) will do. The writer finds five amp fuse wire a comfortable size. The reason for the thicker wire is because it is not so strong as the Crown wire and would break if the same size was used. For the small pulleys and gears, the Meccano range should be investigated, as they are cheap and readily obtainable. Aero modelling shops seem to have a goodly variety of such components for their customers, and these too, should be considered. One other item which has given trouble is the matching transformer to the input circuit. The fluctuating field of a mains transformer even two feet away, induces into the matching transformer an annoying hum sometimes; therefore severe screening may be necessary.

Fig. 11 shows alternative arrangements which may suit one's purpose better. In the case of Fig. 11 "Y" the two spools are placed one above the other on an extended centre pillar. The friction between the lower spool and the turntable should be greater than the friction between the lower spool and the top spool and the lower spool does the pulling, and pulls via the mechanism concerning itself with the wire laying from the top spool. The wire pulls off the top spool against the desired direction of rotation caused by friction, thus keeping the wire taut. For rewinding, the spools are placed about.

Numerous machines have been built and the writer has lost count of the different types made, mostly out of bits and pieces taken from ex-government gear, and there is no reason why the mechanically minded should not attempt a mechanism to their way of thinking, so long as the operation of passing wire from one spool to another and rewind is accomplished. One point to be most careful about is the true running of pulleys and drive wheels. The slightest wobble will upset good recording, and what appears to be too slight to worry about will put a "wow" into the music which is most distressing. A little extra care at first will save

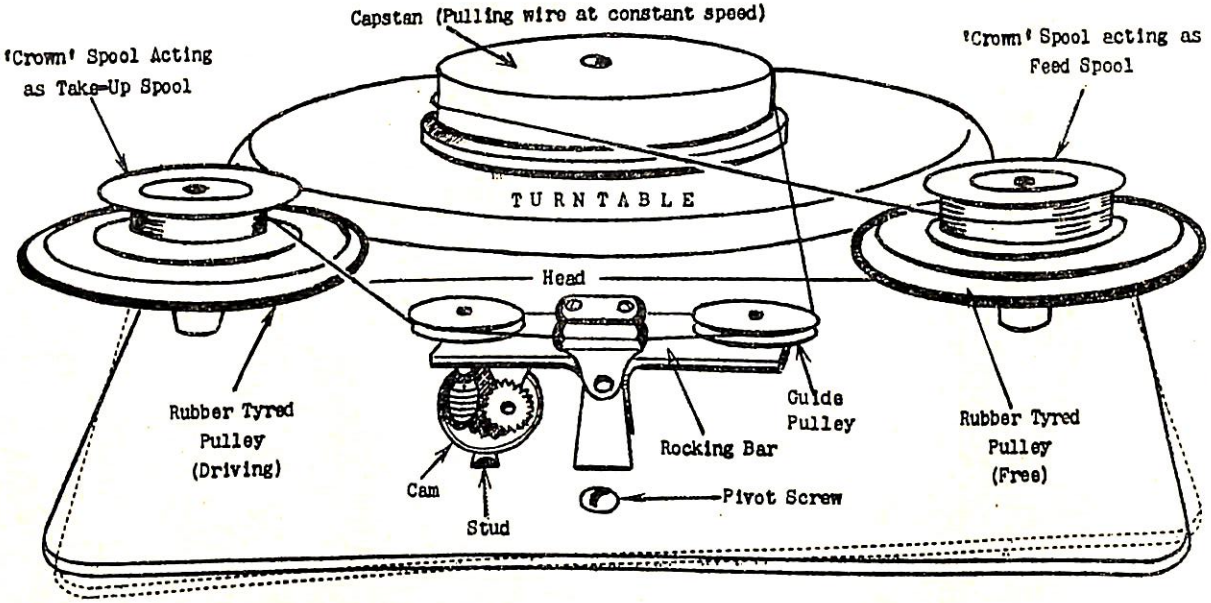

FIG. 11. *Alternative forms of construction.*

hours and hours of faking or trying to make good a piece of slip-shod work. Some may be satisfied by fixing a pulley in each corner of a room and driving a length of wire around them by means of a hand twist drill brace; this would be a spectacular experiment but hardly good enough for serious recording.

Recording machines are expensive on account of the precision work entailed and with care they will stand up to long and hard service.

The machine shown in Fig. 10 is designed to rewind back the wire at a much greater speed than when recording; obviously it would be tiresome if a half hour recording took another half hour to wind back. Such is the drawback with the machine shown in Fig. 9 using the gramophone turntable.

As it will be seen it is a more ambitious job. It depicts one of many the writer has assembled. Each differs from the others; the controlling factor often being the odd shapes of the pieces of metal which came to hand, but so long as the recording medium is moved from one spool to the other at a constant smooth speed then there is little to worry about. It will be noticed that the small wheel on the motor shaft is engaging the perimeter of the right drive wheel. Above the deck, on the same shaft as the right drive wheel, is the take-up spool. The rotation of this spool draws the wire across the head from the feed spool. The posts on each side of the head were found necessary in this case because the narrowness of the upper deck and the disposition of the parts brought the mouth of the head over the edge of the platform, therefore the posts were included to bring the wire forward from the spools. The posts have sleeves on them which can revolve to ease friction. The right drive wheel has on the end of its shaft a "worm." This engages the worm-wheel and rotates the heart-shaped cam. This bears on the end of the see-saw and is kept on contact by the weight of the head's bracket assembly bearing on the other end. The rotation of the cam makes the rocker-arm see-saw and raise and lower the head which helps to direct the wire to the spool and so lay the turns side by side. The right drive-wheel is much larger than the motor drive wheel and therefore it revolves at a slower rate; to work out this rate, one should take the mean diameter of the wire on the spool and multiply by 3·14 to find the average circumference of the wire on the spool. If such circumference is laid

out straight and multiplied by the number of revolutions of the spool, then one should be able to assess the length of wire passing a given spot in a given time. If the speed is too fast, this amounts to wasting wire because a slower speed, about 2 feet per second, will record equally well, although a much slower speed will render the voices of one's friends recognisable. If this can be accomplished, then there is little to worry about.

Referring to Fig. 10 again, if the motor is slid to the left, the small motor wheel engages the idler wheel, which in turn engages the left drive-wheel. The ratio of the sizes of these wheels will enable the spool above deck to rotate much faster than the take-up spool on the right, therefore shortening the time during wind-back. The rubber-tyred idler and left drive wheel have quite a pressure to each other, this friction puts a drag on the feed-spool and helps when the machine is recording to hold back the wire sufficient enough to prevent it over-running or looping up. To avoid complicating the drawing, the braking-pads have been ommitted. Such pads can be made from little strips of an old felt hat rolled up like a Swiss roll and gripped in a circled end of brass strip. The small pads can be arranged to bear on the underside of whichever one happens at the moment to be the feed-spool.

OTHER TYPES OF HEAD

The head used with the Fig. 10 machine was copied from the average American type and is shown at centre Fig. 12, both the approx. size, and the same head enlarged to aid better understanding. The core can be laminated and theoretically it should be, but the writer is more than satisfied with the results obtained with the single piece of metal. The best material to use is Mumetal, but if you are unable to get a piece on the spur of the moment, then use a piece of soft iron. The first thing which comes to mind as suitable material is a small iron hinge. Pick one about the thick-

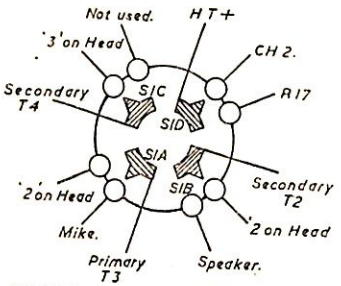

SEPARATE VIEW OF SWITCH CONNECTIONS ON AMPLIFIER. (S1).

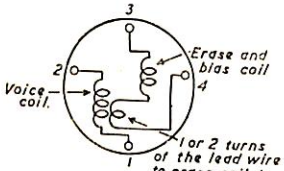

CONNECTIONS OF RECORDING AND PLAYBACK HEAD.

TYPES OF HEAD USED COMMERCIALLY OR SUGGESTED FOR CONSTRUCTION BY AMATEURS.

Actual size of 'Webster' Head (American.)

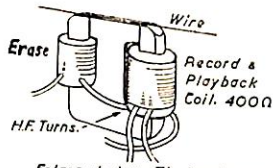

Enlarged view. The head uses two gaps but this does not seem to offer any great advantages.

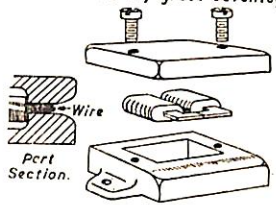

Whatever type of head is used it must be securely clamped down to avoid vibration. In the simple head shown above, the head is 'sandwiched' between blocks of brass, (cut away to clear coils.) Any other non-magnetic material will do, e.g. Perspex or Aluminium.

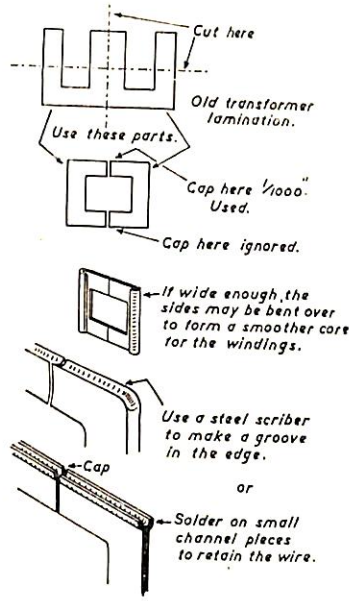

FIG. 12. *Suggested recording heads.*

ness of a sixpence or thereabouts, and with a little juggling the very screw holes might be used as an aid to the slots or avoided as the case may be. To make the "windows" drill two or three holes in line and with a small file clear away surplus metal until the desired shape is obtained. The gaps should not be cut with a saw as the width of the gaps will be too wide. It is better to get a strong pair of snips and cut through. Very lightly file up the sheared faces so that the two halves will fit together again with the barest suggestion of light shining through. The middle leg marked X should be wider than the two side legs. This is for very technical reasons. If you really want to know why, send 2s. to the Patent Office, Southampton Buildings, Chancery Lane, W.C.2, and ask for Patent Specification No. 611,952, its a good buy and well worth getting. The constructor will probably find the hardest part of all is to put the channel for the wire along the edge. Files are too clumsy. The writer has had good results with a steel wheel glass cutter. The core should be clamped up with blocks each side in a vice. The whole should be level so that a rule can be used as a guide for the glass cutter. Several cuts should cut a channel deep enough for the wire to bed down into. The gaps should be filled with solder to stop foreign matter getting in and also at the same time prevent them from vibrating. Fig. 12 right shows another suggested design.

A RECORDING AMPLIFIER

The amplifier the writer regularly uses with his own machines is shown in Fig. 13. There is nothing exceptional about it. It has been working without any hitch for over eighteen months, and so far there has been no need for anything different. Examination of the circuit will show that two inputs are provided for, one input goes direct to the grid of the left half of V_2 and the other via the input transformer to the grid of the first valve V_1. It should be noted that this input transformer is screened as is also the condenser C_4 and its connection right up to the

grid; failure to do this will allow the the fluctuating fields of mains transformers to get into this part of the circuit and although the fluctuations may be extremely feeble, they get amplified hundreds of times from this point onwards and make themselves heard in no uncertain manner in the loud-speaker. The resistor R_{17} is not an error. Constructors may find and complain that the switch when switched from the screen and Ch2 of the valve V_4 to R_{17} shorts the H.T. supply to earth. This is done deliberately, the drain of R_{17} is equal to the drain of the valve V_4 and therefore the voltages to the valves V_1 and V_2 remain constant, if R_{17} was omitted then the supplies to valves V_1 and V_2 would rise when the oscillator was switched out of circuit. The anode H.T. feed of V_4 is an output transformer, the secondary is left open. As will be seen from the diagram (fig. 13), the circuit is quite straightforward and constructors should not experience any trouble from instability provided that the normal precautions relating to audio equipment are observed.

If any motor boating is experienced and V_2 is suspected, try using two bias resistors, one in the cathode of each half of the valve, that is put R_{11-12} into each lead and bypass each with a condenser C_9, thus the link from one cathode to the other should be cut; if not, the two bias resistors will be in parallel with each other. The transformer T_2 in the anode of right half of V_2 should have a high impedance primary because this valve is normally an interstage valve having a fairly high internal impedance. To avoid the expense of a special transformer try using a medium push-pull output transformer. Disregard the centre tap and use the two outers, one end to anode and the other to H.T. The four hole socket into which the recording playback head can be plugged, can be a four-pin valve base, and the head assembled into the base removed from a four-pin valve. If this method is adopted one could have a variety of heads and plug in and out as desired. If a thickish steel cap can partly shroud the head, the possibility of hum getting into the head might be hindered, but a cap is not essential, unless of course, need proves it to be so. The transformer T_3 might be rotated about its position to determine if there is one position in which it is less subject to hum. If this particular circuit is made up and the output obtained to the speaker not as loud as could be desired, then another stage of amplification could be wired in, and its H.T. supply derived from the

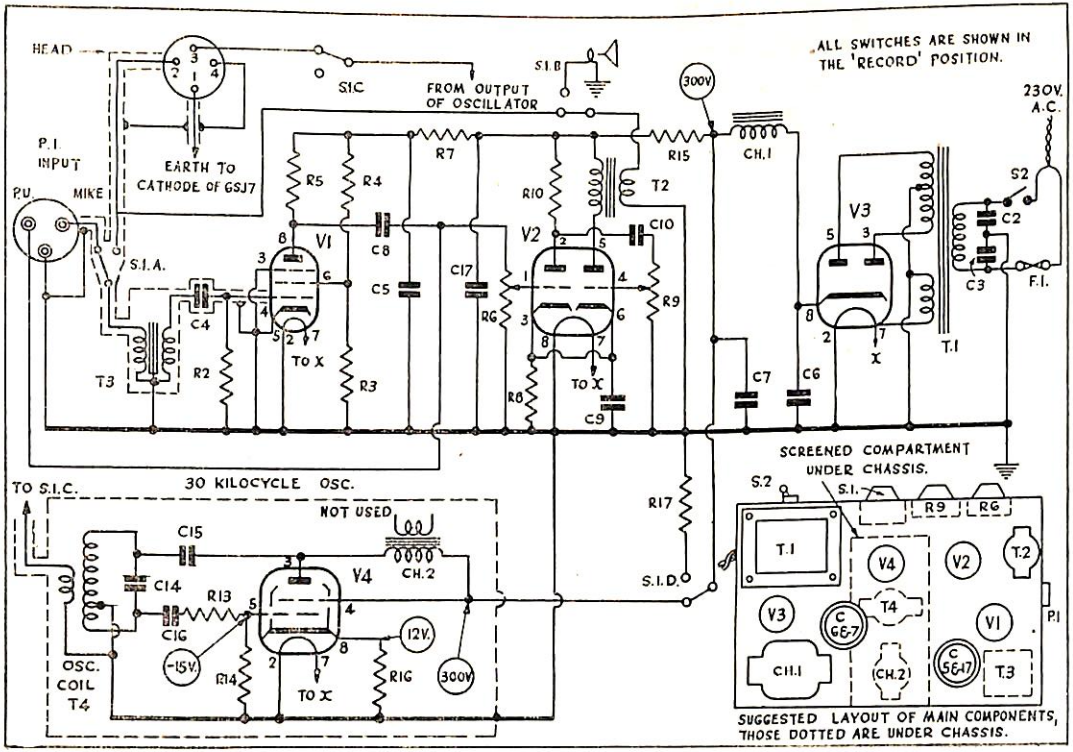

FIG. 13 *The Author's recording amplifier.*

power dissipated in R_{17}. In this case R_{17} will not be necessary, and the H.T. supply for this added stage, will at one moment be feeding the oscillator until switched out of circuit, and then the extra amplifier. The on-off switch S_2 in the primary of the mains transformer should be a toggle type and not included in either of the volume controls R_6 or R_9. Here again is a possible source of hum pick-up by induction from the switch parts into the volume control parts and hence to the grid. The oscillator coil consists of 1,200 turns with a tapping at 900 turns, the tapping goes to chassis and earth. The secondary winding consists of 75 turns. These coils, ready made, can be bought quite cheaply, and since great care has to be taken to prevent insulation break-down, they are well worth the money.

The oscillator coil shown in Fig. 5a, is a plain inductance, untapped and with no secondary step-down winding and the writer out of idle curiosity wondered how this would work in conjunction with the Fig. 13 circuit. The oscillator was switched out of circuit and a lead taken via the ·00025 mfd. output condenser and fed to the number 3 socket of the head. To complete the R.F. circuit, the chassis of the "Mail A Voice" was connected to the chassis of Fig. 13 and equal results were obtained as with the oscillator temporarily out of circuit. Further tests were made to copy the "Mail A Voice" practice of feeding the oscillator's output direct to head winding (1 and 2). The results were hopeless, and the reason sought. Examination will show that the winding (1 and 2) is parallel with the secondary winding of T_2. Tests were made and it was found that much of the oscillatory current was dissipated within the secondary of T_2. A high frequency choke was then connected in series with the secondary T_2 and No. 2 socket of the head. The output from the ·00025 condenser was now fed into No. 2 socket, and all was well. Therefore it would seem that when capacity feed for the oscillatory current is employed and a step down trasformer also used then chokes are also called for.

Whether one uses an existing amplifier or builds up one or other of those described in these pages one is at liberty to experiment with oscillators shown in connection with another circuit. The purpose of this book is to initiate and build up a band of research workers in the fascinating study of magnetic recording, so never be satisfied, good results should

never be good enough, try and get better. Years ago Baird recorded television pictures upon a gramophone record and a field lies open here for investigation as to the practicability of recording television upon a magnetic medium.

Component List for Fig. 13.

R2 470 k ohms. ½ watt.
R3 47 k ohms. ½ watt
R4, R5 220 k ohms. ½ watt
R6 1 megohm potentiometer
R7 100 k ohms. ½ watt
R8 470 ohms. ½ watt
R9 0·5 megohm potentiometer
R10 39 k ohms. ½ watt
R11, R12 1 k ohms. ½ watt if required (see text).
R13 820 ohms ½ watt
R14 68 k ohms. ½ watt
R15 820 ohms. 1 watt
R16 270 ohms. ½ watt
R17 10 k ohms. 10 watts

C2, C3 0·05 mfd. 350 v wkg.
C4 0·01 mfd. 350 v wkg.
C5–C17 8 + 8 mfd. electrolytic 350 v wkg.
C6–C7 16 + 16 mfd. electrolytic 350 v wkg.
C8–C10 0·02 mfd. 350 v wkg.
C9 25 mfd. 12 v wkg.
C14 0·001 mfd. 750 v wkg. mica
C15, C16 0·002 mfd. 750 v wkg. mica
CH1 15/20 Henries 80 m/A choke
CH2 Speaker transformer

T1 Power transformer. Pri. To suit mains.
Sec. 250–0–250 v.
6·3 v 3 A.

T2 Output transformer to match one triode of V2 to speaker

T3 Screened microphone input transformer

T4 30 K/cs. oscillator coils.

F1 Fuse holder and lamp fuse

S1, a-b-c-d 4 pole 2 way rotary switch

S2 S.P.S.T. toggle switch

P1 Input socket

V1 6SJ7, 6J7 or EF37 5/-

V2 6SN7 4/9

V3 6X5GT–G 6/-

V4 6V6GT–G 5/-

4 I. Octal valve holders

BIBLIOGRAPHY

The Telegraphone	V. Poulsen	Ann. der Phys. Vol. 3, pp. 754-760 1900.
" "	V. Poulsen	Electrician. Nov. 30, 1900, p. 208.
Magnetic Recording	T. H. West	Electrotechnische Zeitschrift, 1901.
" "	L. R. Rellstab	Ditto (E.T.Z.) pp. 59, 181, 246.
" "		Ditto 1903, p. 752.
" "		Electrician, July 31, 1903, p. 611.
" "		E.T.Z. 1920, p. 513.
" "	A. Nasarischewily	E.T.Z. 1921, p. 1368.
Properties and Testing of Magnetic Materials	T. Spooner	McGraw-Hill Publishing Co. N.Y. 1927.
Recording and Reproducing Sound	H. A. Frederick	Review Scientific Instruments, Vol. 5, pp. 177 to 182, 1928.
Electromagnetic Sound Recording	Dr. Kurt von Stille	E.T.Z. Vol. 51, 27-3-1930, pp. 449-451.
Dictating Machine in Industry	S. J. Begun	E.T.Z. Vol. 53. Mar. 1932, pp. 204-205.

Theory of Magnetic Recording	E. Hormann	E.N.T. Vol. 9. Nov. 1932, pp. 388-403.
Recording on Steel tapes	E. Meyer & E. Schuller	Zeitschrift für technische Physik. Vol. 13, Dec. 1932, pp. 593-599.
Delayed Speech	C. N. Hickman	Bell Labs. Record, Vol. 11, June 1933, pp. 308-310.
Magnetic Recording		Wireless World, Vol. 34, 5-1-1934, pp. 8-10.
Marconi-Stille Recorder	N. M. Rust	Marconi Review, Jan.-Feb. 1934, pp. 1-11.
Magnetic Recording	H. J. von Braunmuhl	Funktechnische Manatshefte, Dec. 1934, pp. 483-486.
„ „	H. J. von Braunmuhl	Funktechnische Vorwarts, Vol. 5, 1935, Part 4.
A Mirror for the Voice	R. F. Mallins	Bell Labs. Record, Vol. 13, Mar. 1935, pp. 200-202.
Sound on Film Photographic	W. F. Schrage	Electronics, Vol. 8, June 1935, p. 179.
A.E.G. Magnetophone	T. Volk	Filmtechnik, Vol. 2, Oct. 26, 1935, pp. 229-231.
Magnetic Recording	E. Schuller	E.T.Z. Vol. 56, 7-11-1935, pp. 1219-1221.
The Magnetophone	W. H. Hansen,	E.T.Z. Vol. 56, 7-11-1935, p. 1232.
The Blattnerphone	H. E. Hamilton	Electrical Digest, Dec. 1935, p. 347.
Lorenze Steel Tape Machine	S. J. Begun	Lorenz Berichte, Jan. 1935, p. 3.
Magnetic Recording	W. F. Schrage	Radio-Craft, Vol. 7, Mar. 1936, pp. 537-562.
Lorenze Steel Tape Machine	S. J. Begun	Elec. Communication, Vol. 15, July 1936, pp. 62-69.
An Experimental Telegraphone		Mechanics & Handicraft, Vol. 15, July 1936, pp. 90-93 and 104.
Sound on Magnetic Tape	C. N. Hickman	Bell Sys. Tech. Jnl. Vol. 16. Apr. 1937, pp. 165-177.
Developments in Magnetic Recording	S. J. Begun	Journal of the Soc. Motion Picture Engineers, Vol. 28, May 1937, pp. 464-472.
For Objective Speech Study	S. J. Begun	Journal of the Soc. Motion Picture Engineers, Vol. 29, Aug. 1937, pp. 216-218.
A Magnetic Recorder	T. J. Malloy	Electronics, Vol. 11, Jan. 1938, pp. 30-32.
Recording on Steel Tapes	H. Weber	Tevh. Mitt. Schewiz. Telegr. u. Telephon. Verw., Vol. 16, Feb. 1938, pp. 1-8.
A.C. Erasing of the Magnetic Recording	Nagai, Kenzo, Sasaki, Siro, Endo, Junosuke	Jrnl. Inst. Elec. Communication Engrs. of Japan, Mar. 1938, No. 180.
Magnetic Recording and Broadcasting	A. E. Barrett and C. J. F. Tweed	I.E.E. Journal, Vol. 82, Mar. 1938, pp. 265-285.
H.F. Technique & Rad. Communl. Magnetic Recording	H. Weber	A.S.E. Bull. Vol. 29, 1-4-1938, pp. 148-151.
Synthetic Reverberation	S. J. Begun and S. K. Wolf	Communications, Vol. 18, Aug. 1938 pp. 8-9.
Magnetic Recording	S. J. Begun	Electronics, Vol. 11, Sept. 1938, pp. 30-32.
Electro-Acoustics	E. Meyer	G. Bell & Sons, 1939, pp. 79-85.
The Soundmirror	R. D. Washburne	Radio-Craft. May, 1939, p. 654.
The Textophone	D. W. Aldous	Wireless World, 29-6-1939, pp. 611-612.
Construction of a Recorder	R. L. Mansi	Electronics and Television and Short Wave World, Jan.-Mar. 1940.
Magnetic Recording and Broadcasting	S. J. Begun	Procd. I.R.E. Vol. 29, Aug. 1941, pp. 423-433.

Microscopic Viewing of Magnetic recordings	H. Heidenwolf	Lorenz Berichte, Dec. 1941, pp. 119-122.
The Mirrorphone		Wireless World, Vol. 48, Feb. 1942, pp. 42-43.
The Textophone	H. Wildbolz	Schweizer Archiv. Vol. 9, Supplem. 10-10-1942, pp. 42-43.
Recording Problems	A. Christeler & H. Wildbolz	Schweiz. techn. Z. Vol. 17, 17-12-1942, p. 709.
Voice Recorded on Hairlike Wire		General Electric Service, Vol. 46, p. 694, Dec. 1943.
Voice Recorded on Hairlike Wire	R. H. Opperman	Franklin Institute Journal, Vol. 237, Feb. 1944, p. 100.
New Recorder	M. Camras	Armour Research Foundation.
Eng. Details of Recorder	D. W. Pugsley	Radio News. Radionics Sec. Vol. 1. Vol. 30. Nov. 1943, pp.3/5, 39.
Investigation of Magnetic Tape Recorders	M. C. Selby	Electronic Indust. Vol. 3. Jan. 1944, pp. 116/118, 206, 210, 212.
Recording Fundamentals B.B.C. Mobile Equipment	D. W. Pugsley	Electronics. Vol. 17. May 1944, pp. 133/135.
Magnetic Recording	D. W. Aldous	Q.S.T. Vol. 28, May 1944, pp 10/12.
Magnetic Recording	G. L. Ashman	Wireless World, Vol. 50. Aug. 1944 pp. 226/228.
Magnetic Materials	F. Brailsford	Electrician. Vol. 133, 18-8-1944, pp. 138/140.
Supersonic Frequencies	H. Toomin, Hershel & D. Wildfeuer	Wireless World, Vol. 50. Aug. 1944, pp. 226/228.
Amateur Recorder	W. M. Davies	Electronic Eng. Vol. 17, Sept. pp. 142/145. Oct. pp. 192/195. Nov. pp. 248/50, 1944.
Recording on Wire Principles Wire Recorder	I. Queen	Proceedings I.R.E. Vol. 32, Nov. 1944, pp. 664/668.
Magnetic Tape Recorder	C. E. Winter	Radio-Craft, Jan. 1945, pp.220, 236/237.
Supersonic Bias	L. C. Holmes & D. L. Clark	Radio-Craft, Mar. 1945, pp. 345-367.
Recording Aspects	V. M. Brooker	Elect. News and Engng. Vol. 54, May 1, 1945, p. 49.
Frequency Modulated Magnetic Tape Transient Recorder	Brush Development Corp.	Radio News, June 1945, pp. 32/34, 138, 140/141.
High Quality on Wire	Lynn C. Holmes	Electronics, July 1945, pp. 126-136.
Multiple Wire Recording	R. J. Tinkham	Proc. Inst. Rad. Eng. Australia, Vol. 6 No. 3, Sept. 1945, pp. 3/9.
A B.H. Curve Tracer for Magnetic Wire	T. H. Long	Proc. I.R.E., Vol. 33, Nov. 1945, pp. 753/760.
Magnetic Recording	S. J. Begun	Communications, Vol. 25, No. 12, Dec. 1945, pp. 44/46.
A New Wire Recorder Head Design	T. H. Long	Communications, Vol. 25, No. 12, Dec. 1945, p. 99.
Signal to Noise Levels	D. E. Woodridge.	Electrical Eng. Vol. 65, Mar. 1946 (Trans.) pp. 146/149.
An Appraisal of Designs	A. E. Javitz	Communications, Vol. 26, No. 14, April 1946, pp. 30/36.
Developments in Recording	Dr. R. B. Vaile	Transactions (Amer) I.E.E., Vol. 65, No. 4, April 1946, pp. 216/220.
The Magnetophone	R. A. Power	Electrical Eng. Vol. 65, June 1946 (Trans.) pp. 343, 352.
Ipsophone		Electrical Manufacturing, June 1946.
Theoretical Response	M. Camras	Proc. of the National Electronics Conference, Vo. 2. 1946, pp. 597/602.
Magnetic Sound for Films	M. Camras	Wireless World Vol. 52, June 1946, pp. 195/198.
		Scope, July 1946, pp. 52/55, 92, 94, 96.
		Armour Research Foundation.
		Proc. I.R.E. (W. & E.) Vol. 34, Aug. 1946, pp. 597/602.
		Jour. S.M.P.E. Vol. 48, No. 1, Jan. 1947.

Development of film magnetic recording	M. Camras	Jour. Accoust. Soc. Amer. Vol. 19, No. 2, Mar. 1947.
Magnetic Sound on Films	C. Randall	Home Movies, Vol. 13, No. 12, Dec. 1946, pp. 748, 772/773.
Principles and Methods	A. B. Rosenstein	Radio News (Rad. & Elec. Eng. Dept. Ed.) Dec. 1946, pp. 3/6, 29.
Wire Recorder Wow	A. W. Sear	Jour. Accoust. Soc. Amer. Vol. 19, No. 1, Jan. 1947, pp. 172/178.
Summaries of Papers	Various	Jour. Accoust. Soc. Amer. Vol. 19, No. 1, Jan. 1947, pp. 283/293.
Recent Developments	S. J. Begun	Jour. Soc. M.P. eng. Vol. 48, No. 1, pp. 1/13.
New Type Recorder	R. J. Tinkham & J. S. Boyers	Jour. Soc. M.P. eng. Vol. 48, No. 1, pp. 29/35.
Coated Paper Tape	H. A. Howell	Jour. Soc. M.P. eng. Vol. 48, No. 1, pp. 36/46.
Magnetic Sound for Films	M. Camras	Jour. Soc. M.P. eng. Vol. 48, No. 1, pp. 14/28.
Reproduction Data	G. T. Clears	International Projectionist, Vol. 22, No. 2, Feb. 1947, p. 14.
Magnetic Development for Films	M. Camras	Jour. Accoust. Soc. Amer. Vol. 19, No. 2, Mar. 1947, p. 332.
Magnetic Paper Tape Recorder		Radio News (Rad. & Elec. Eng. Dept. Ed.) Mar. 1947, pp. 15 & 23.
Developments in Recording	P. T. Hobson	Electronic Eng. Dec. 1947, pp. 337/382.
Measurement of the Magnetic Properties of Fine Wire	P. T. Hobson and others	Electronic Eng. Dec. 1947, pp. 383/388.
Filmgraph Sound Recorder	J. H. Jupe	Electronic Eng. Dec. 1947, p. 389.
A Bibliography	D. W. Aldous	Electronic Eng. Dec. 1947, pp. 390/391.
Tape Recorders	H. A. Chinn	Electronic Eng. Dec. 1947, pp. 393/396.
Amateur Recorder	L. B. Hust	Radio News. Feb. 1948, pp. 39/42, 166.
Gen on Wire Recorder	R. Frank	Radio News. Feb. 1948, pp. 43, 152/153.
Basic Amplifier	L. S. Hicks	Radio News. Feb. 1948, pp. 44/45, 168/169.
Tape Systems	C. E. Jackson	Radio News. Feb. 1948, pp. 46/47, 140.
Technical Discussion	G. T. Clears	Radio News. Feb. 1948, pp. 52/53, 147/151.
Recording & Reproduction of Sound	Oliver Read	Radio News. Feb. 1948, pp 56/58, 131/140.
Converting a "Brush"	M. Fleming	Radio News. Feb. 1948, pp. 59, 173.
Magnetic Paper Disc	J. H. James	Communications, Vol. 27, No. 4, April, 1947, p. 32.
Design of Recorders	R. H. Ranger	Tele. Tech. Aug. 1947, pp. 56/57, 99/100.
Recording and Record Collector	A. C. Shaney	Amer. Record Guide, Sept. 1947, pp. 3/6.
Manufacture of Tapes, L.C.L.G. and details of Magnetophone		B.I.O.S. Report, No. 1. Appendix 6B, H.M.S.O.
Manufacture of Tapes, L.C.L.G. and details of Magnetophone		T.I.I.C. Report, No. 059, June-Aug. 1945 (U.S.A.). F.I.A.T. Report, No. 923, May, 1947. H.M.S.O.
Elements of Tape Recording	A. C. Shaney	Amplifier Corp. of Amer. Broadway, N..Y

BERNARDS RADIO BOOKS

37.	Manual of Direct Disc Recording	2/-
42.	Shortwave Radio Handbook	2/-
43.	Modern Radio Test Gear Construction ...	1/6
44.	Radio Service Manual	2/6
45.	Radio Reference Handbook	12/6
48.	Radio Coil and Transformer Manual	2/-
52.	Radio Tuner Unit Manual	2/6
53.	Radio Constructors' Manual	3/-
54.	Radio Resistor Chart	1/6 & 1/-
55.	Handbook of Radio Circuits No. 2	2/6
56.	Radio Aerial Handbook	2/6
57.	Ultra Shortwave Handbook	2/6
58.	Radio Hints Manual	2/6
59.	Television Construction Manual	3/6
60.	Radio Repairs Manual	2/6
61.	Amateur Transmitters' Construction Manual...	2/6
62.	Car and Portable Radio Constructors' Manual	2/6
63.	Radio Calculations Manual	3/6
64.	Sound Equipment Manual	2/6
65.	Radio Designs Manual	2/6
66.	Communications Receivers' Manual	2/6
67.	Radio Valve Equivalents Manual	2/6
68.	Frequency Modulation Receivers' Manual ...	2/6
69.	Radio Inductance Manual...	2/6
70.	Loudspeaker Manual	2/6
71.	Modern Battery Receivers' Manual	2/6
72.	Experimental Circuits Manual	2/6
73.	Radio Test Equipment Manual	2/6
74.	Radio Valve Applications Manual	5/-
75.	International Radio Tube Encyclopædia ...	42/-
76.	Radio Anti-interference Manual	2/6
77.	Walkie-talkie Construction Manual	2/6
78.	Radio and Television Laboratory Manual ...	2/6
79.	The Radio Modernisation Manual	3/6
80.	Television Servicing Manual	4/6
81.	Using Ex-Service Radio Apparatus	2/6
82.	AC/DC Receiver Construction Manual... ...	2/6
84.	International World Radio Station List ...	1/6
85.	Miniature Radio Equipment Construction Manual	2/6
86.	Midget Radio Construction Manual	2/6
87.	The Oscilloscope : Design and Construction...	2/6
88.	Wire Recorder Construction Manual	2/6
89.	High Definition Television Construction Manual	3/6
	Ham Notes for the Home Constructor (Nos. 1 to 4) ea.	1/-

In Preparation

Radio Instruments and their Construction
An Introduction to "Ham" Radio
Circuits Manual No. 3
Handbook of Audio Designs
Low Frequency Equipment Manual
Valve Data Manual
Ham Notes (continuation of series)

Southern Press (Bookprinters) Ltd. (T.U.), 175 Streatham Road, Mitcham.